ESTES

EstesRockets.com

PRO SERIES II

TERRA NOVA™

9739



AGES 18+

Skill Level

EXPERT

MODEL ROCKET INSTRUCTIONS

KEEP FOR FUTURE REFERENCE

IMPORTANT: Please record date found on decal and keep for future reference. _____

⚠ CAUTION: *May not apply to all kits. For safe handling of plastic cement, epoxy, spray adhesive, CA glue, CA accelerator, paint/finishing materials, see manufacturer's warnings and follow instructions for use. To avoid injury, use extreme caution when using hobby knife, scissors, drills, and any cutting tools.*

SUPPLIES

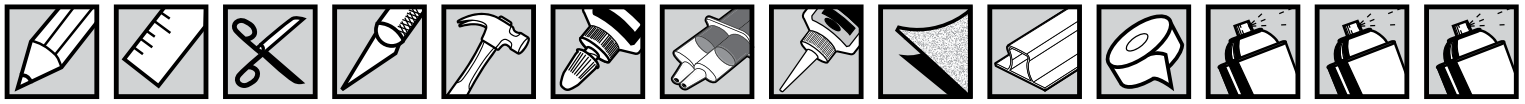

PENCIL | RULER | SCISSORS | HOBBY KNIFE | HAMMER | YELLOW GLUE | EPOXY | CA GLUE | FINE SANDPAPER | SANDING BLOCK | MASKING TAPE | WHITE PRIMER | PAINT (LISTED ON PG 13) | CLEAR COAT (OPTIONAL)

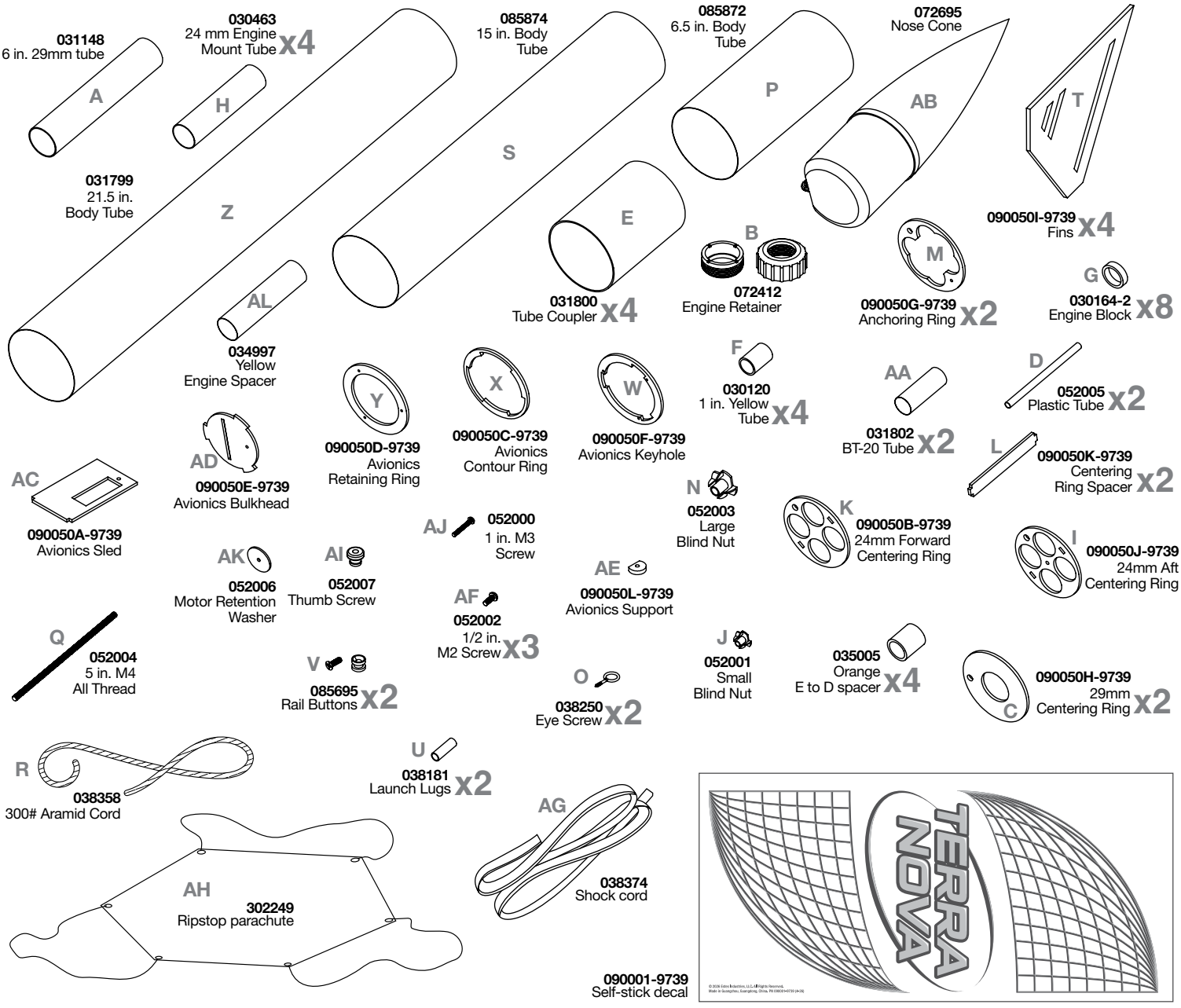

ASSEMBLE 29 MM ENGINE MOUNT

1. Roughen inside edge of B with fine sandpaper.

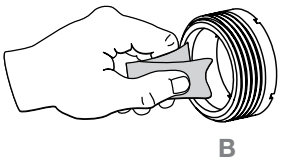

2. Apply epoxy around end of A. Place B over end of A.

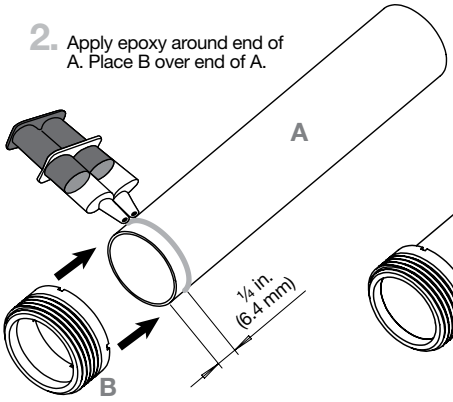

3. Mark A 4 in. from the shoulder of B.

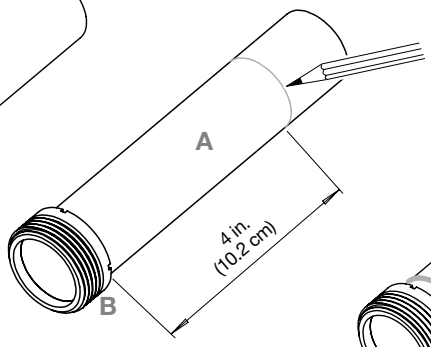

4. Apply glue around A just above B.

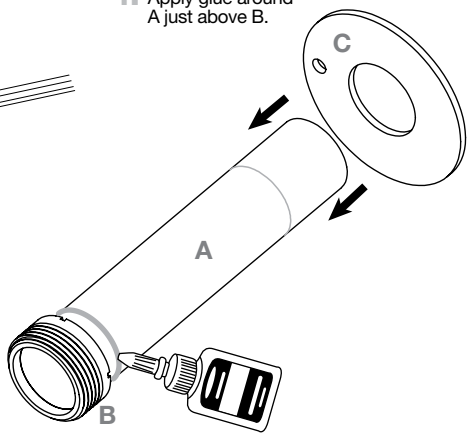

NOTE:
Clean excess epoxy from outside of tube.

5. Place C over A until it is flush with B.

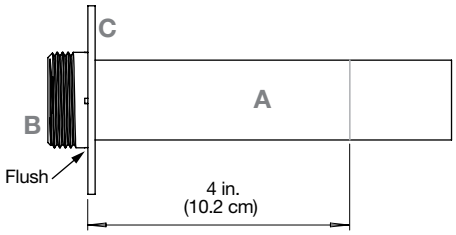

6. Apply glue around A on the 4 in. mark.

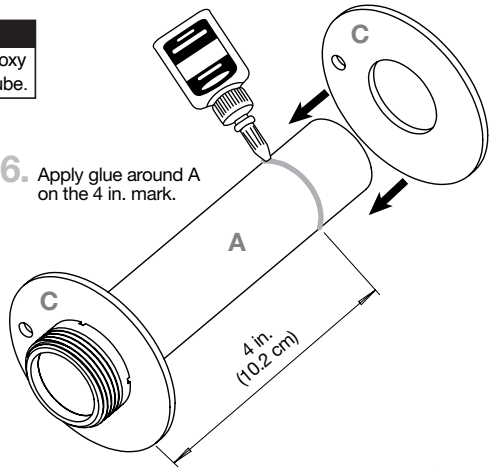

7. Place C over A up to the glue line. Apply glue fillets to all A and C connection points.

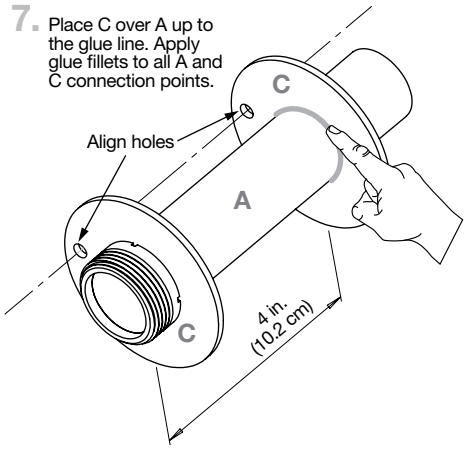

8. Insert D through the aligned holes of C until D is flush with both C ends.

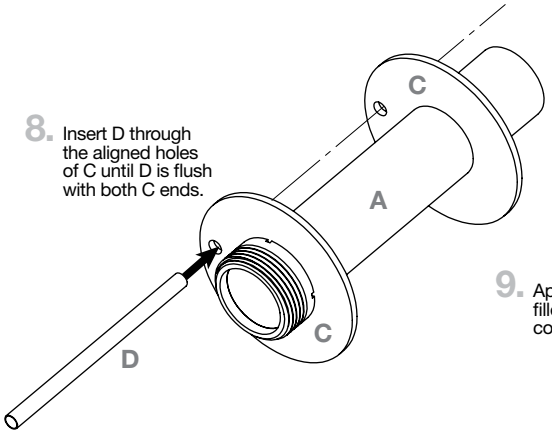

9. Apply CA glue fillets to inside C/D connection points.

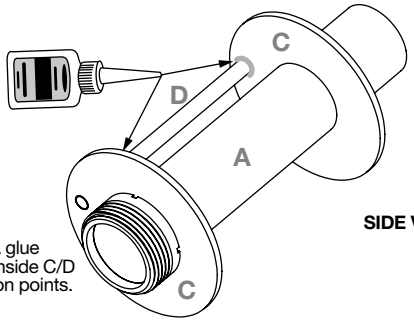

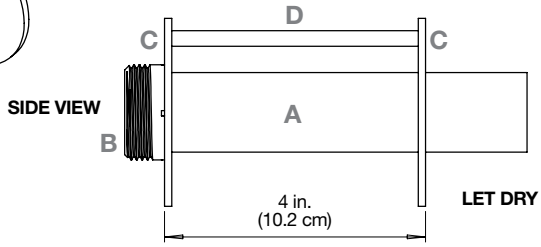

LET DRY

10. Apply glue to inside end of E and around upper C.

NOTE:
Dry fit A/C assembly to ensure fit. If too tight, lightly sand outer C edges

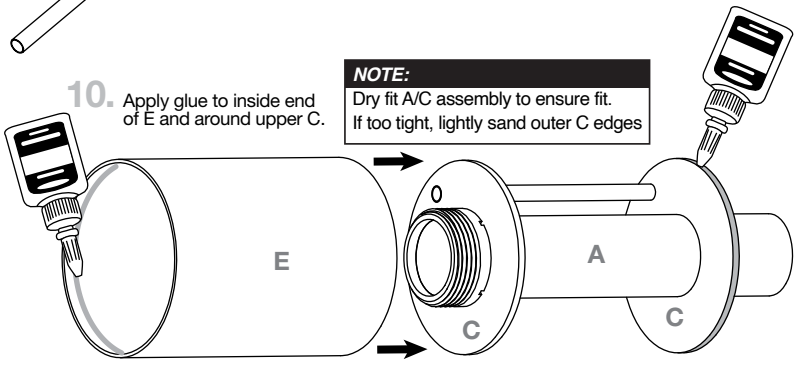

11. Slide E over both C rings until E is flush with both C rings. Wipe off excess glue.

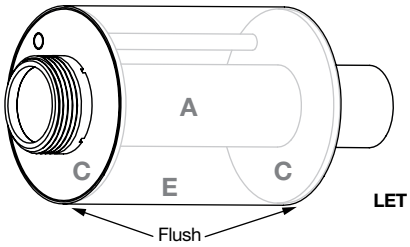

NOTE:
Make sure no glue gets on outside of tube E as this will prevent engine mount from sliding into body tube.

LET DRY

PREPARE CLUSTER ENGINE BLOCKS

1. Cut AA in half.

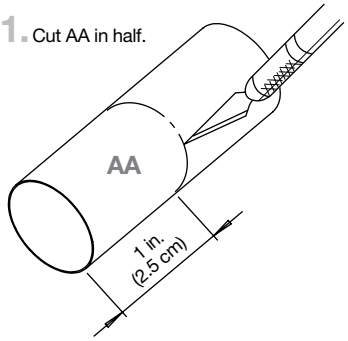

2.

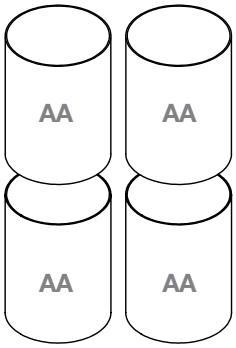

3. Apply glue to inside end of AA.

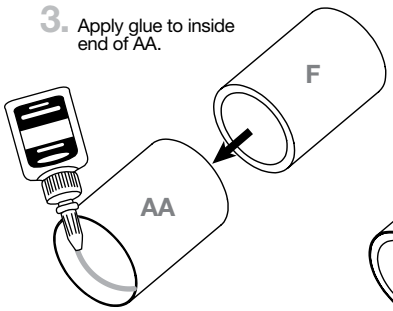

4. Insert F into AA until the ends are flush.

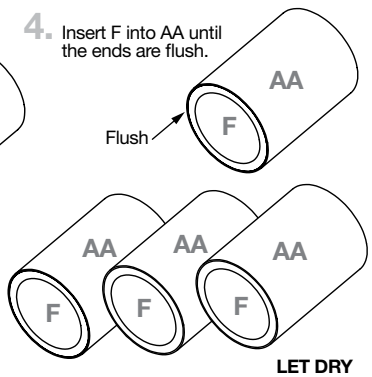

LET DRY

ASSEMBLE CLUSTER ENGINE BLOCKS

1. Apply glue to inside of G.

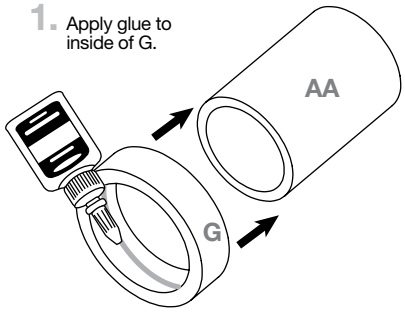

2. Place G over AA until ends are flush.

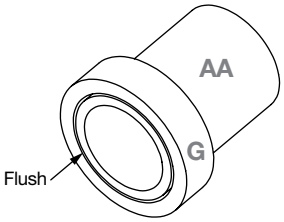

CROSS SECTION VIEW

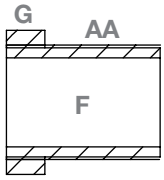

3. Apply glue to edge of G.

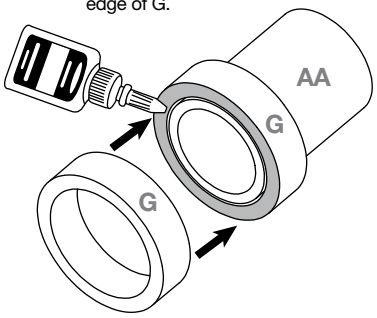

4. Place G onto edge of other G. Ensure both G parts are aligned.

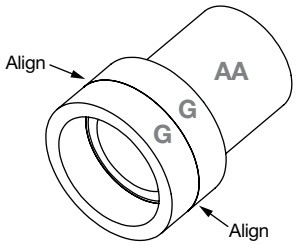

CROSS SECTION VIEW

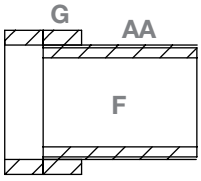

5. Repeat for all engine blocks.

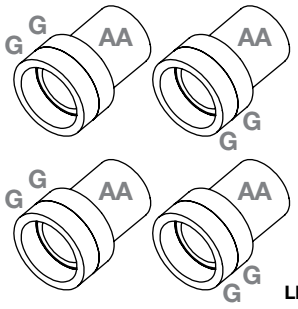

LET DRY

ASSEMBLE CLUSTER ENGINE MOUNT TUBES

1. Dry fit AA/G assembly into H. If needed, sand outside of G parts until assembly fits into H. Apply glue to inside end of H.

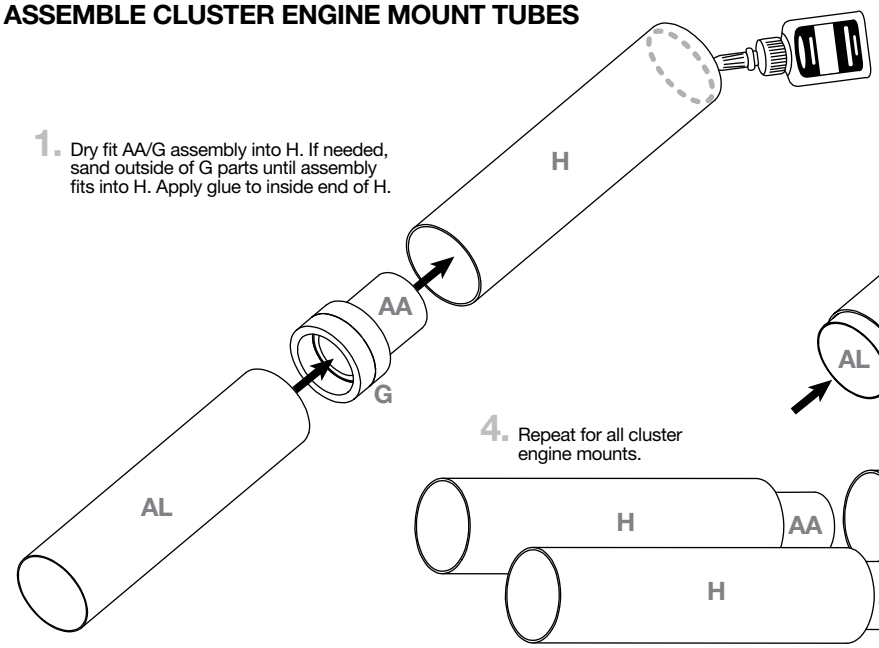

2. Use AL to push AA/G assembly into H until the top end of G is flush with the end of H.

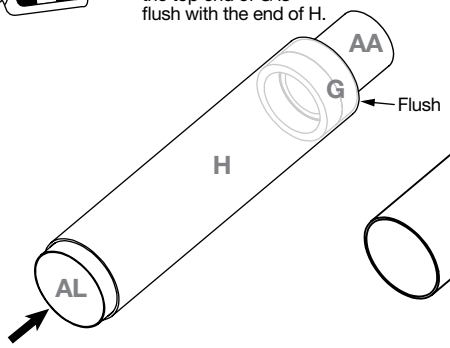

3. Remove AL. Wipe off excess glue.

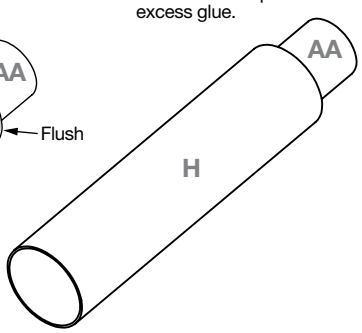

4. Repeat for all cluster engine mounts.

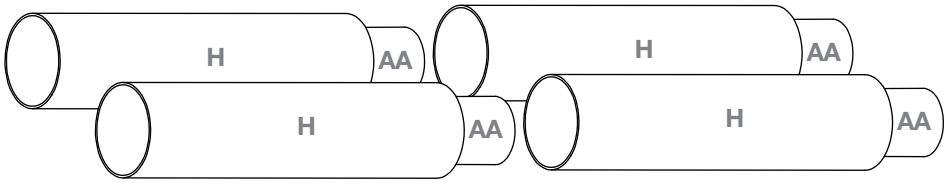

LET DRY

ASSEMBLE CLUSTER ENGINE MOUNT

1. Apply a small amount of epoxy to J.

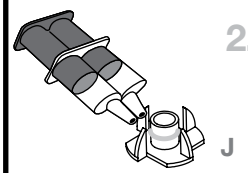

2. Gently tap J into place using a hammer.

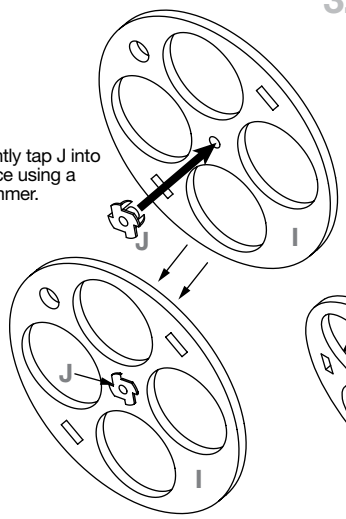

NOTE:
It is important that no epoxy gets into the threads of J.

3. Apply glue to the tabs on the ends of L.

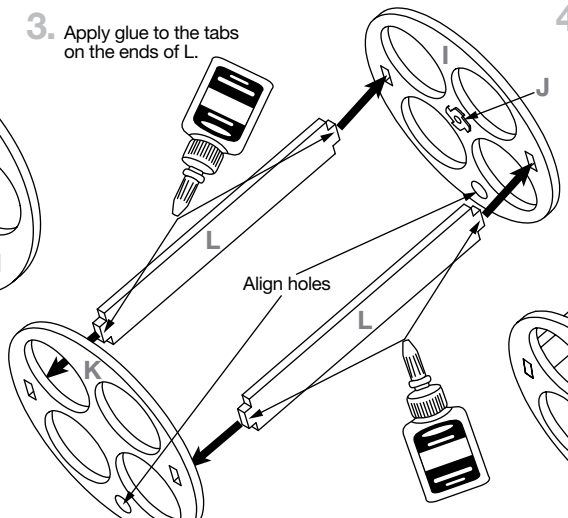

4. Fully insert tabs of L into I ensuring the flat face of J is facing inwards. Fully insert tabs on other end of L into K ensuring the round holes in I and K are aligned.

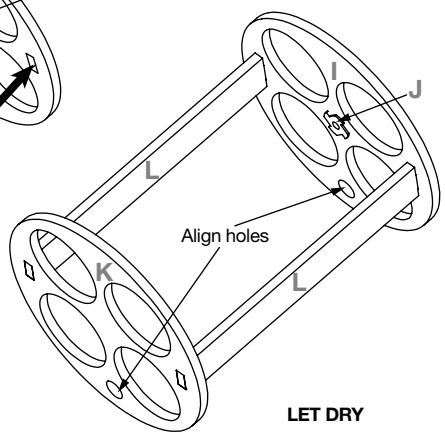

LET DRY

ASSEMBLE CLUSTER ENGINE MOUNT (CONTINUED)

1. Insert AA/H assembly into I and K until top of H is flush with top of I.

NOTE:
Do NOT glue H into K/I.

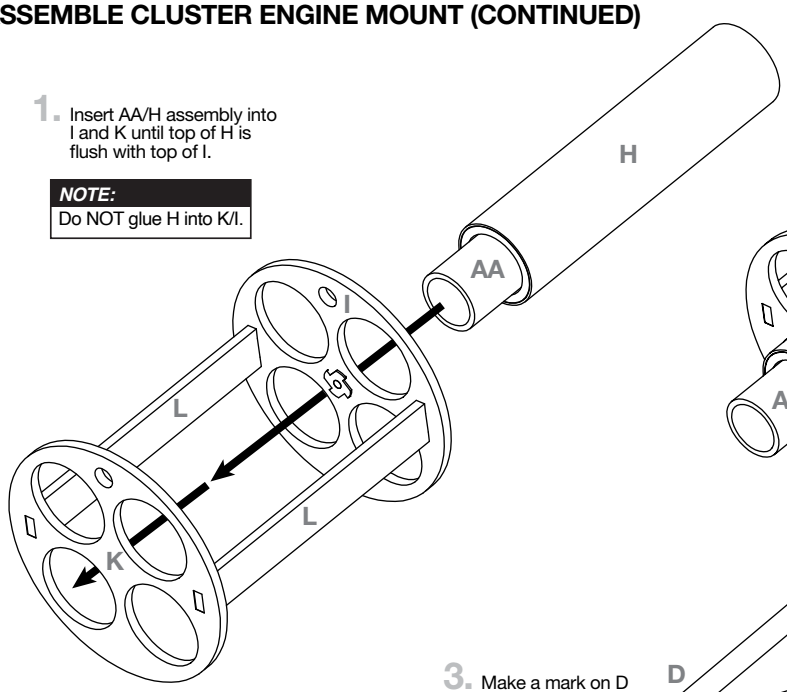

2. Repeat for all engine mount tubes.

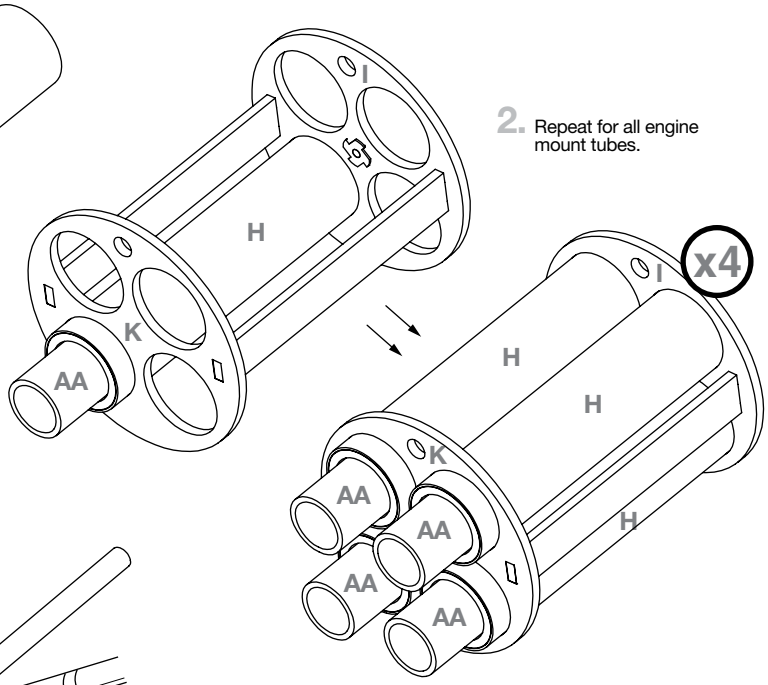

3. Make a mark on D ¼ in. from the end. Cut D to length.

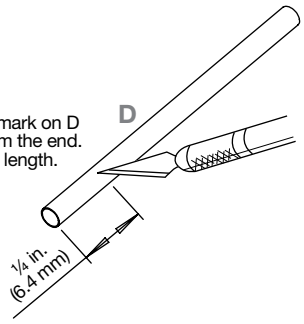

4. Rotate the engine mount.

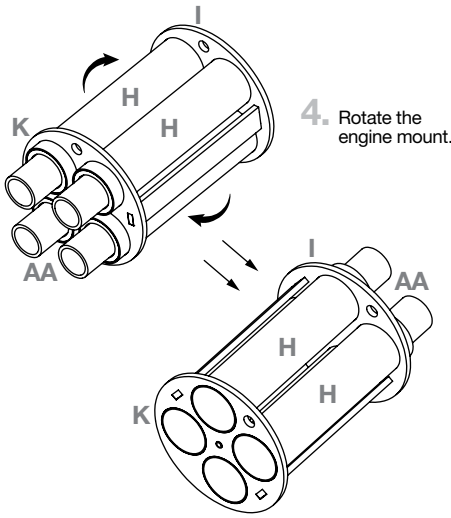

5. Insert D into side hole in I and then through the side hole in K until D is flush with both I and K.

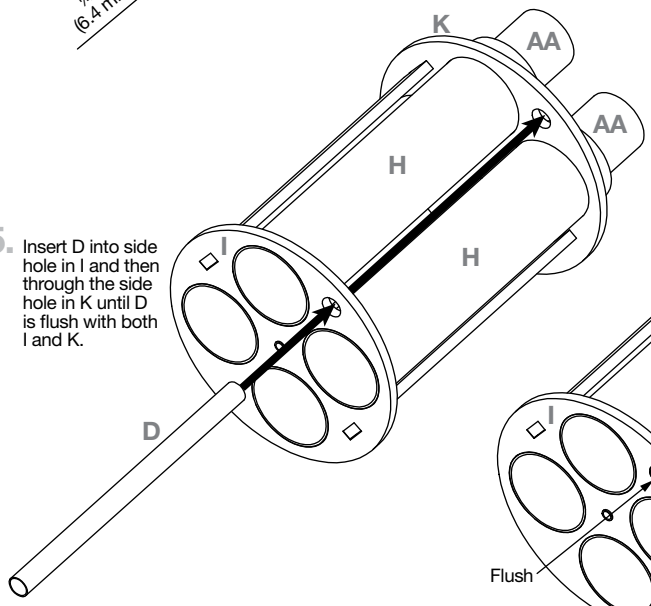

6. Ensure the tubes are aligned and not twisted. Apply yellow glue fillets to all inside H/I/K connection points.
Apply CA glue fillets to inside D/K/I connection points.

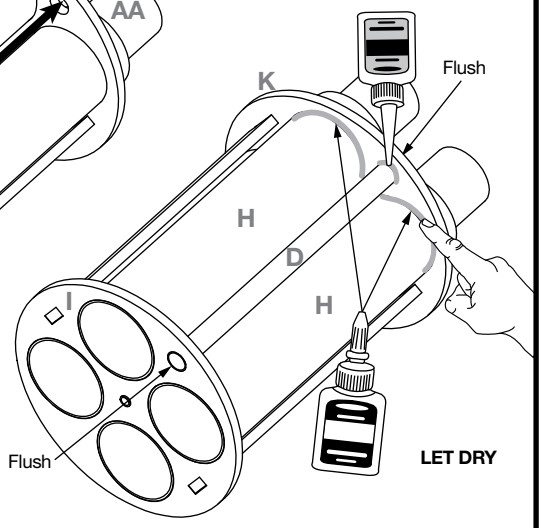

7. Dry fit H/I/K assembly into E. If need be, sand outer edges of I and K to fit. Apply epoxy to outer edges of I and K.

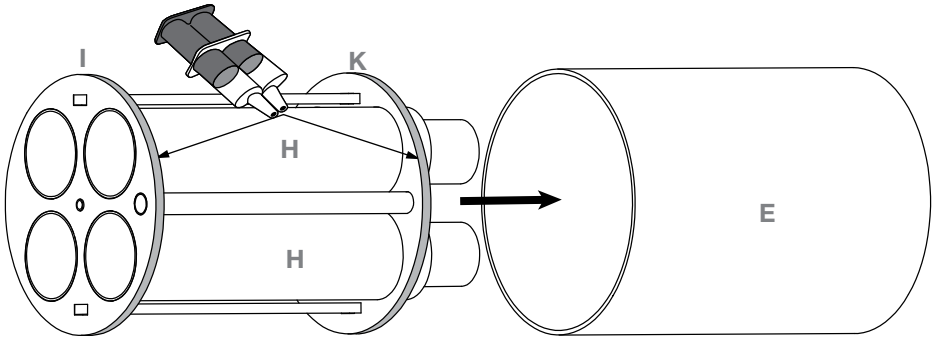

NOTE:
Make sure no glue gets on outside of tube E as this will prevent engine mount from sliding into body tube.

8. Insert H/I/K assembly into E. Wipe off any excess epoxy.

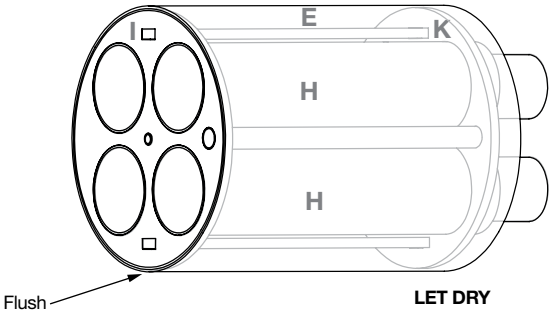

ASSEMBLE STRUCTURAL RING

1. Apply a small amount of epoxy to N.

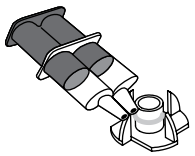

NOTE:
It is important that no epoxy gets into the threads of N.

2. Part N should be gently tapped into place using a hammer.

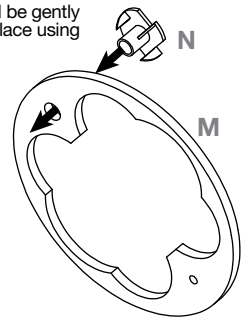

3. Apply a small amount of glue to face of M. Press M parts together aligning both parts.

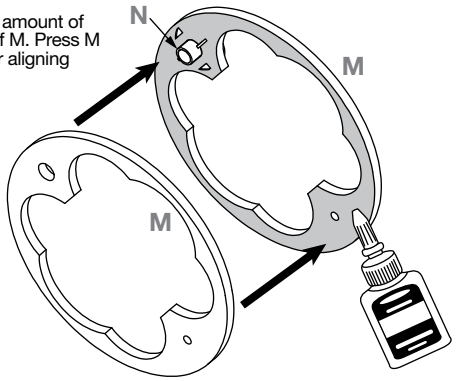

4. Using sandpaper, blunt the point of part O.

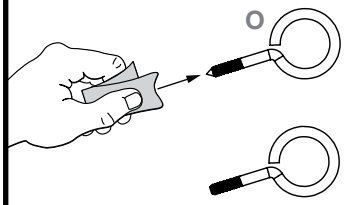

5. Apply a small amount of epoxy to threads of O. Screw O into M.

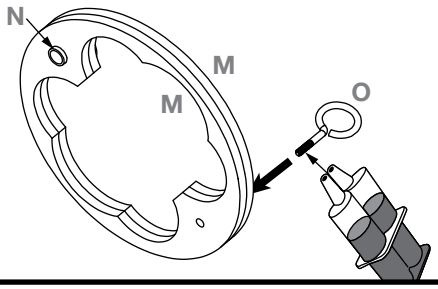

6.

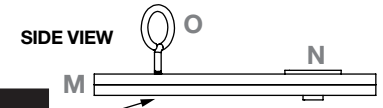

NOTE:
Make sure threads do not go through lower ring.

LET DRY

INSTALL STRUCTURAL RING

1. Make a mark around cluster engine mount ½ in. from the end.

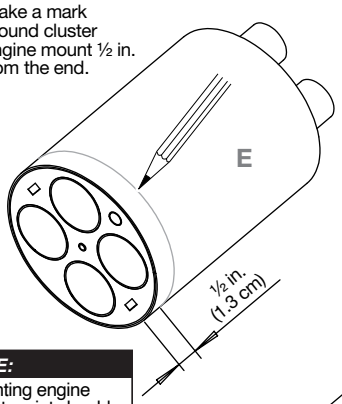

NOTE:
If painting engine mount, paint should only be applied below this line on both the cluster and the single 29mm mount.

2. Insert structural ring into P. Use cluster engine mount to push structural ring into P. Push engine mount in up to marked line.

NOTE:
M should fit snuggly into P. Lightly sand edges of M, if needed.

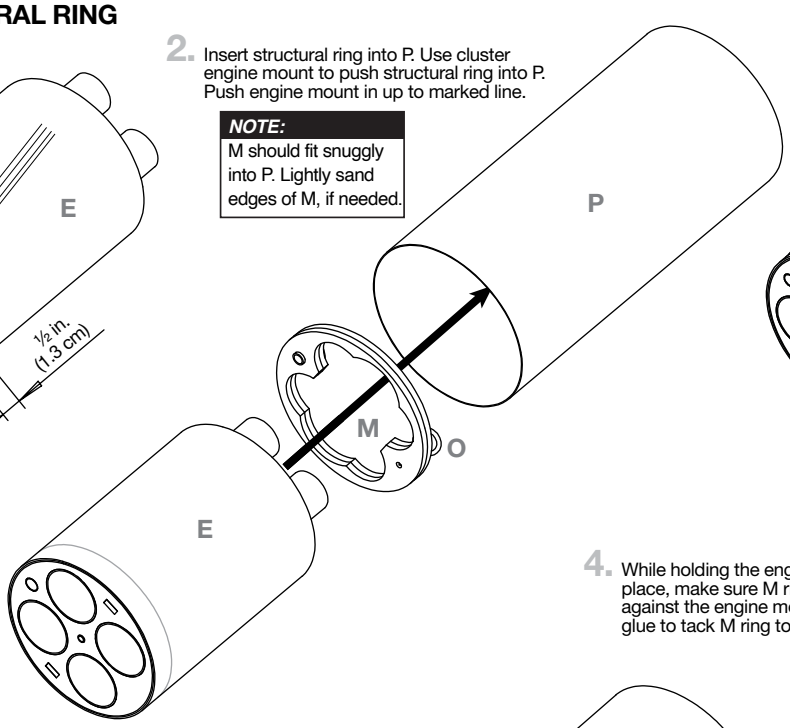

3.

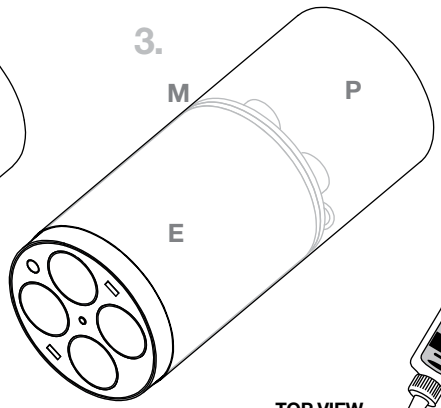

TOP VIEW

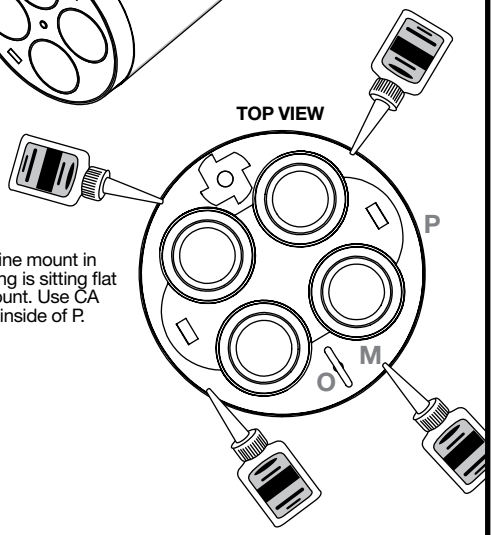

4. While holding the engine mount in place, make sure M ring is sitting flat against the engine mount. Use CA glue to tack M ring to inside of P.

5. Remove engine mount. Apply an epoxy fillet to top of M to secure in place inside P.

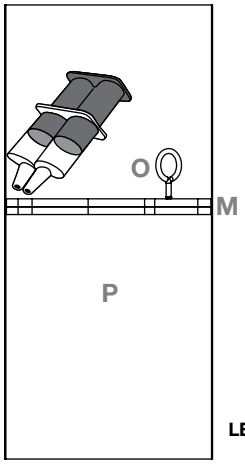

LET DRY

SIDE CROSS SECTION VIEW

6. Thread Q into N until 1 in. of Q is sticking out past P.

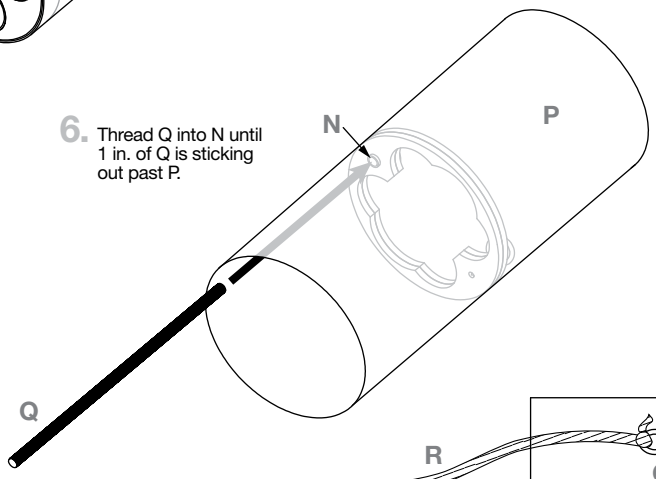

7. Apply epoxy to top of N/Q to lock in place. Tie Aramid cord R onto O in a double knot. Apply a drop of glue to knot in R.

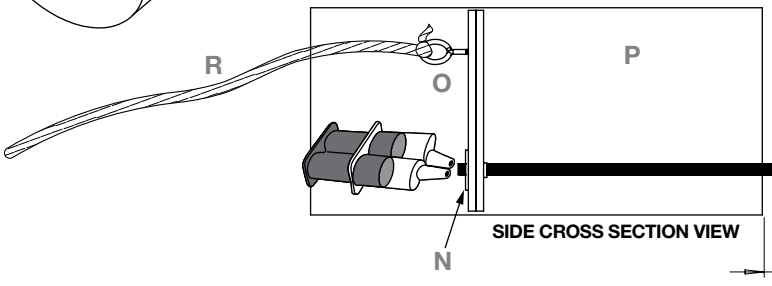

LET DRY

SIDE CROSS SECTION VIEW

ASSEMBLE LOWER BODY TUBES

1. Gently sand the exterior of part P before gently wiping with a damp cloth to remove glassine coating. This improves adhesion.

2. Apply glue to inside ends of P and S. Insert E into P halfway up E. Insert E into S until P and S are flush.

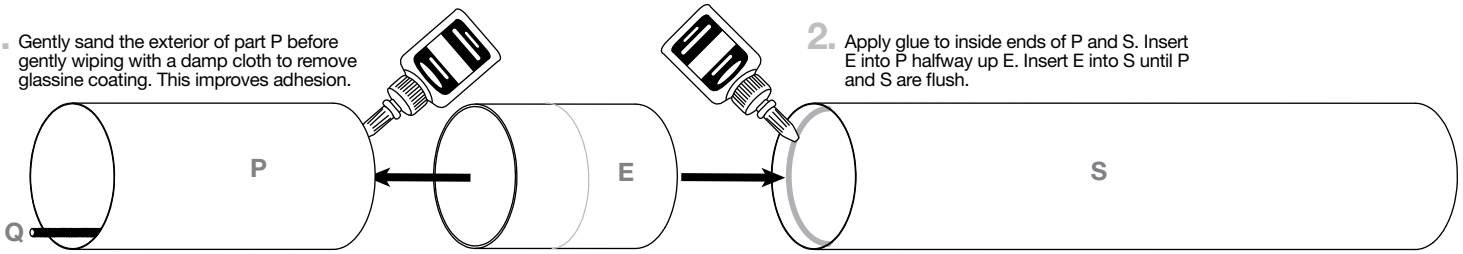

2.



LET DRY

MARK TUBE FOR FINS

1. Cut out fin marking guide from page 8.

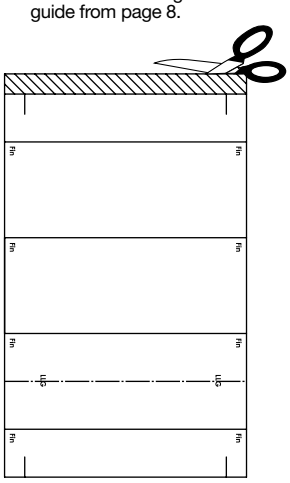

2. Wrap fin marking guide around base of P. Use clear tape to secure marking guide.

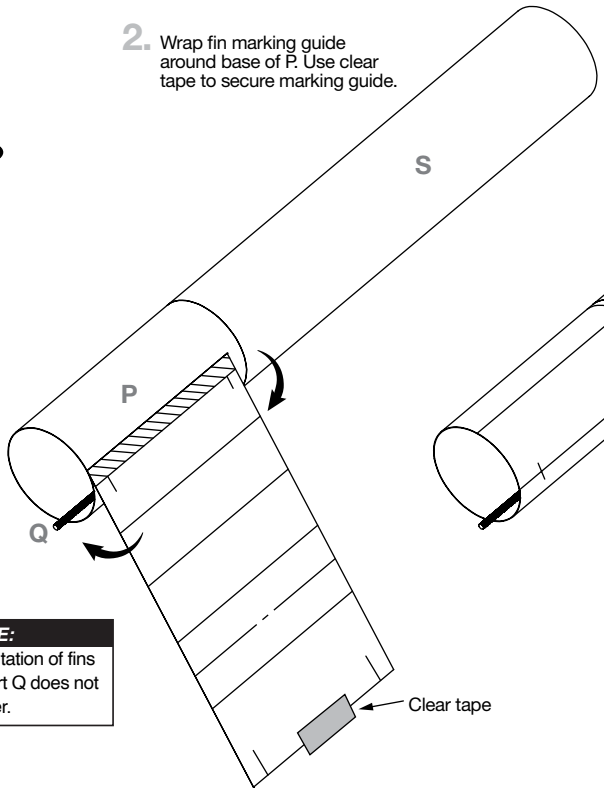

3. Make a mark and label all lines from marking guide onto body tube.

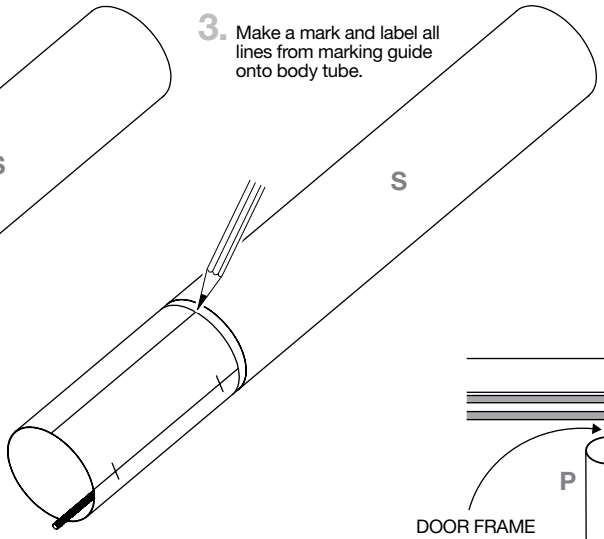

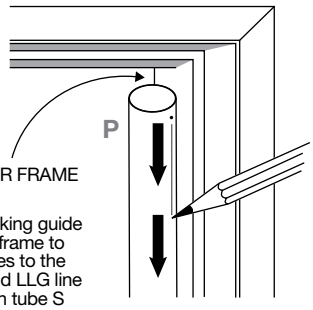

4. Remove fin marking guide and use a door frame to extend all fin lines to the base of P. Extend LLG line all the way down tube S and P.

NOTE:
Orientation of fins to part Q does not matter.

INSTALL FINS

1. Apply CA glue to root edge of fin.

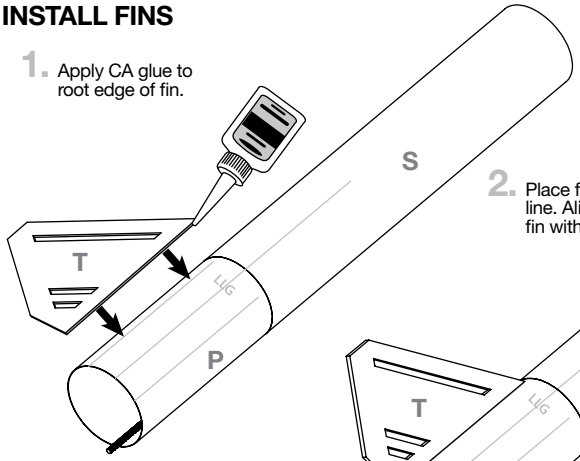

2. Place fin on "Fin" line. Align base of fin with base of P.

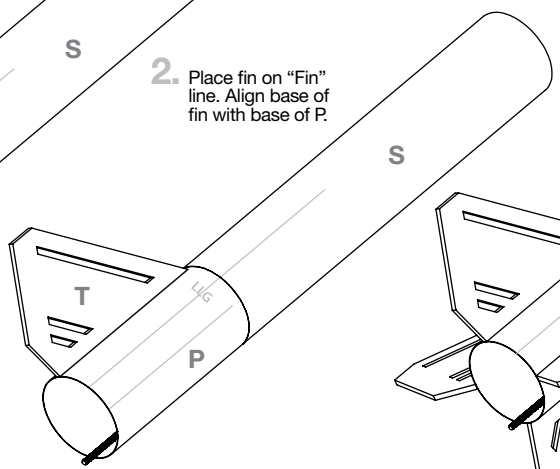

3. Repeat steps 1 and 2 for all fins.

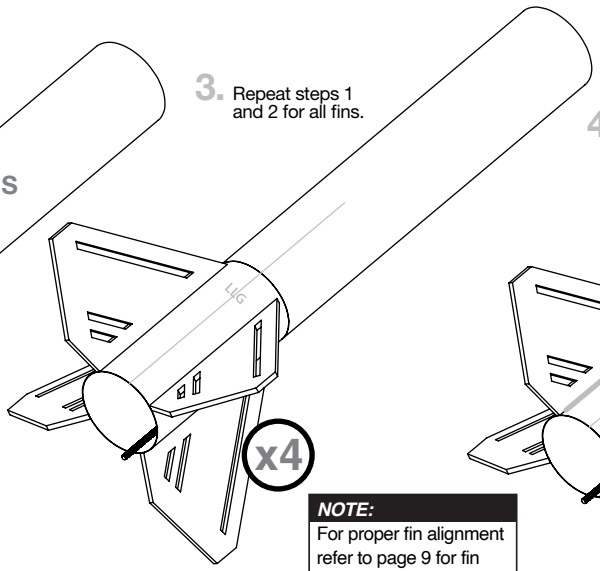

4. Apply epoxy fillets to all fin connection points.

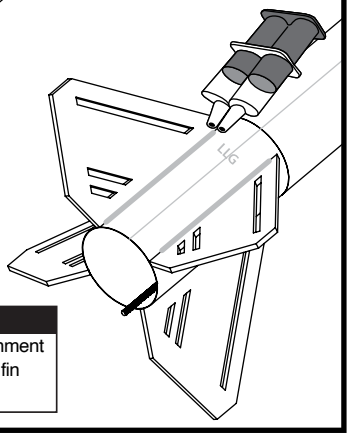

NOTE:
For proper fin alignment refer to page 9 for fin alignment guide.

THIS PAGE
INTENTIONALLY
LEFT BLANK

FIN MARKING GUIDE

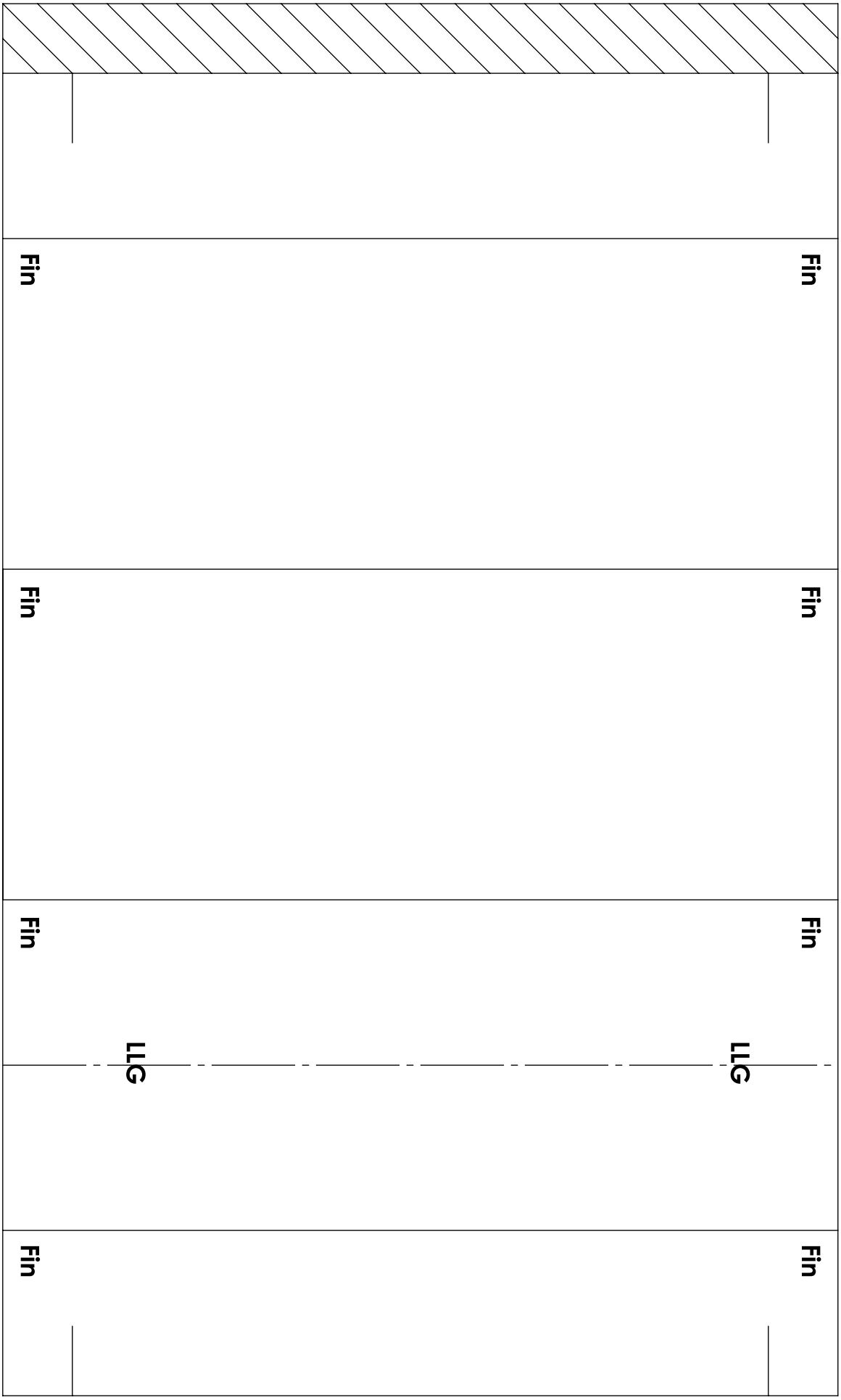

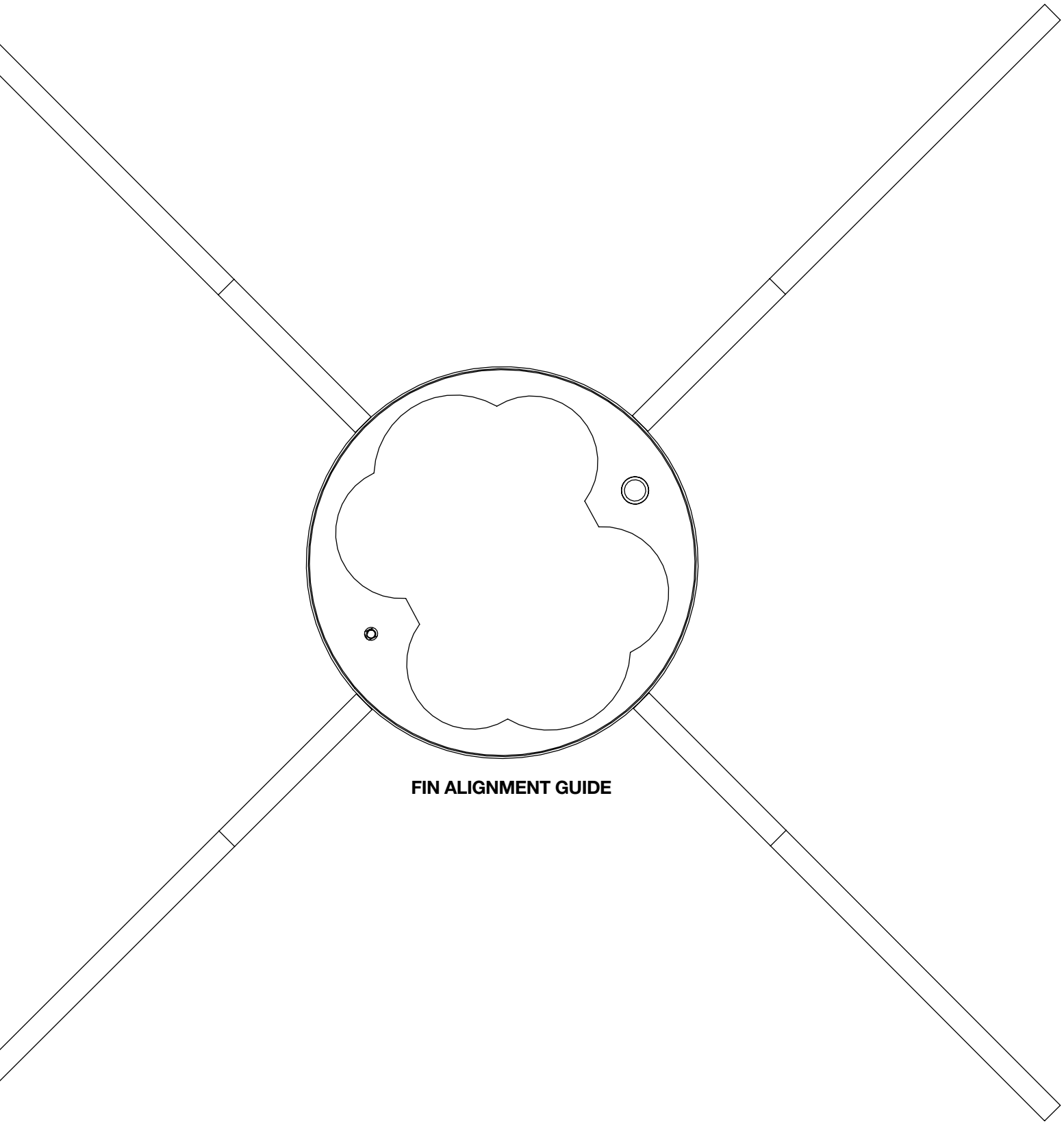

FIN ALIGNMENT GUIDE

THIS PAGE
INTENTIONALLY
LEFT BLANK

ATTACH LAUNCH LUGS (FOR RAIL BUTTONS SKIP TO NEXT STEP)

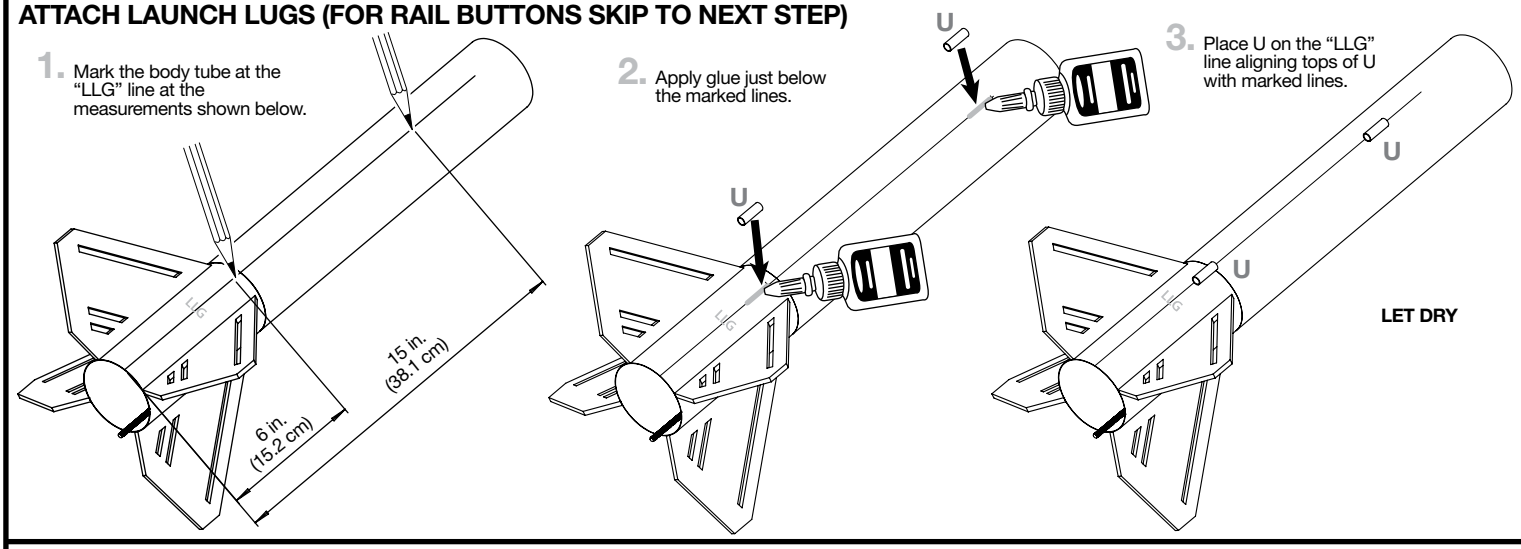

ATTACH RAIL BUTTONS

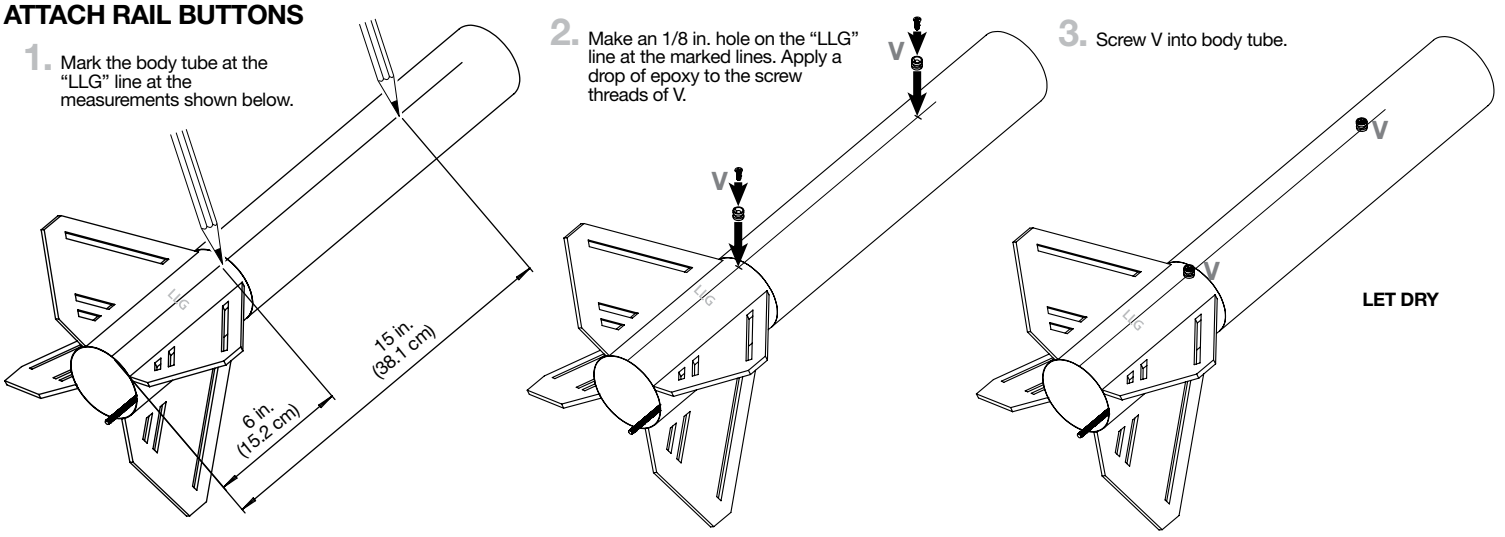

ASSEMBLE AVIONICS RING

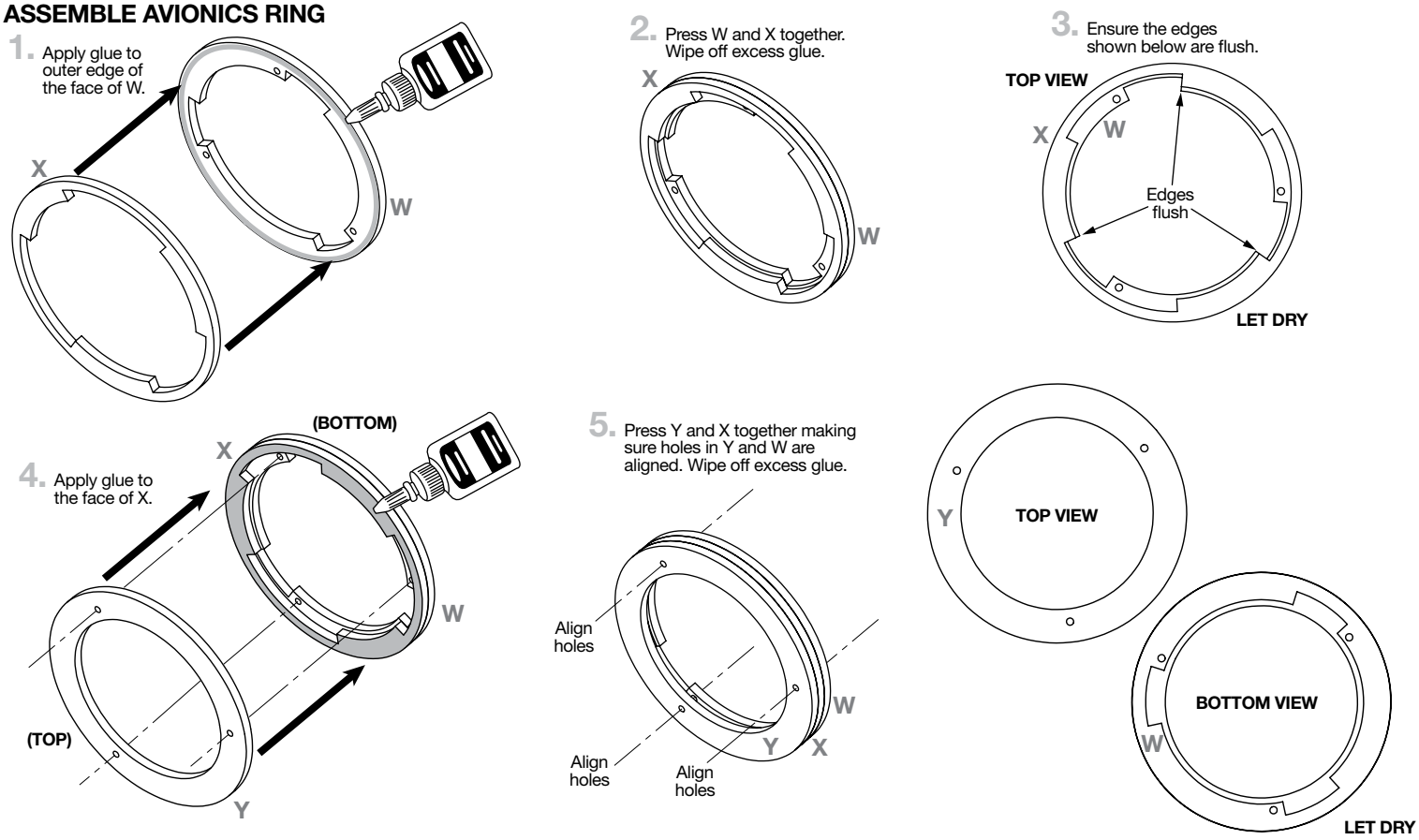

ASSEMBLE AVIONICS BAY

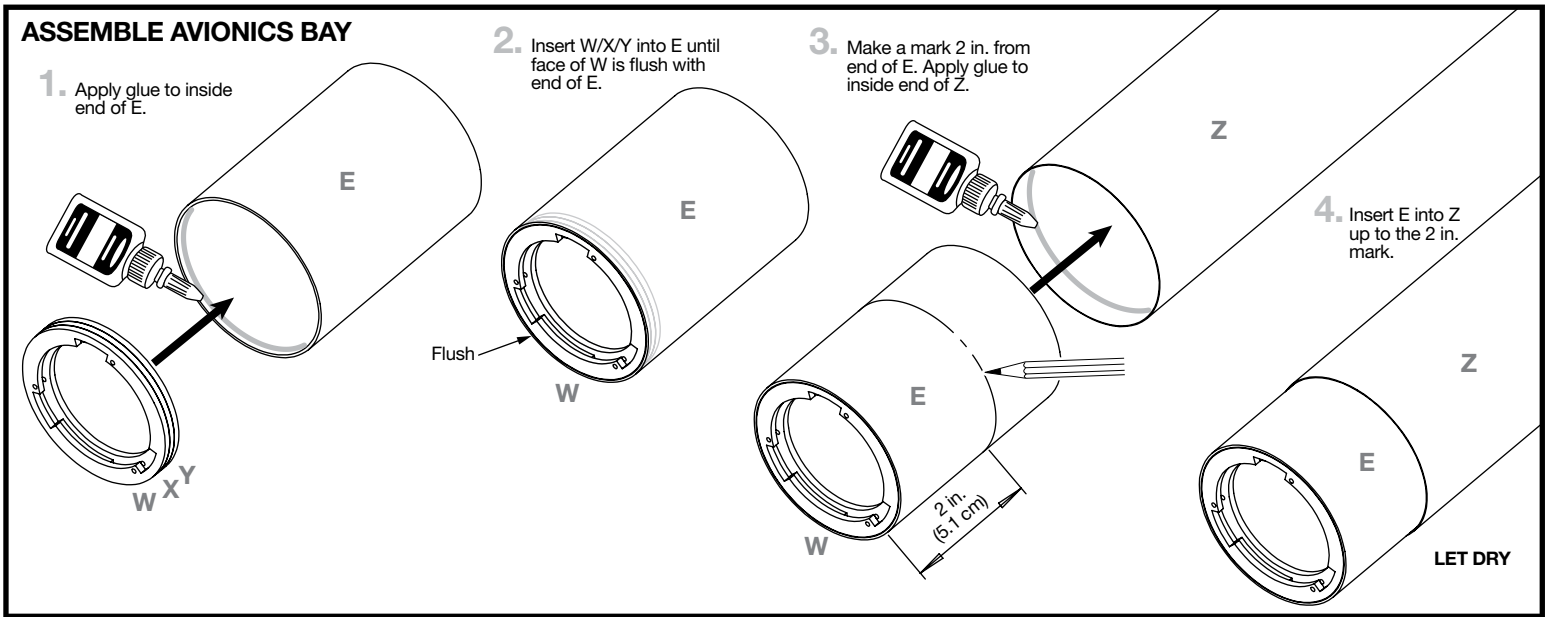

INSTALL NOSE CONE



ASSEMBLE AVIONICS BULKHEAD

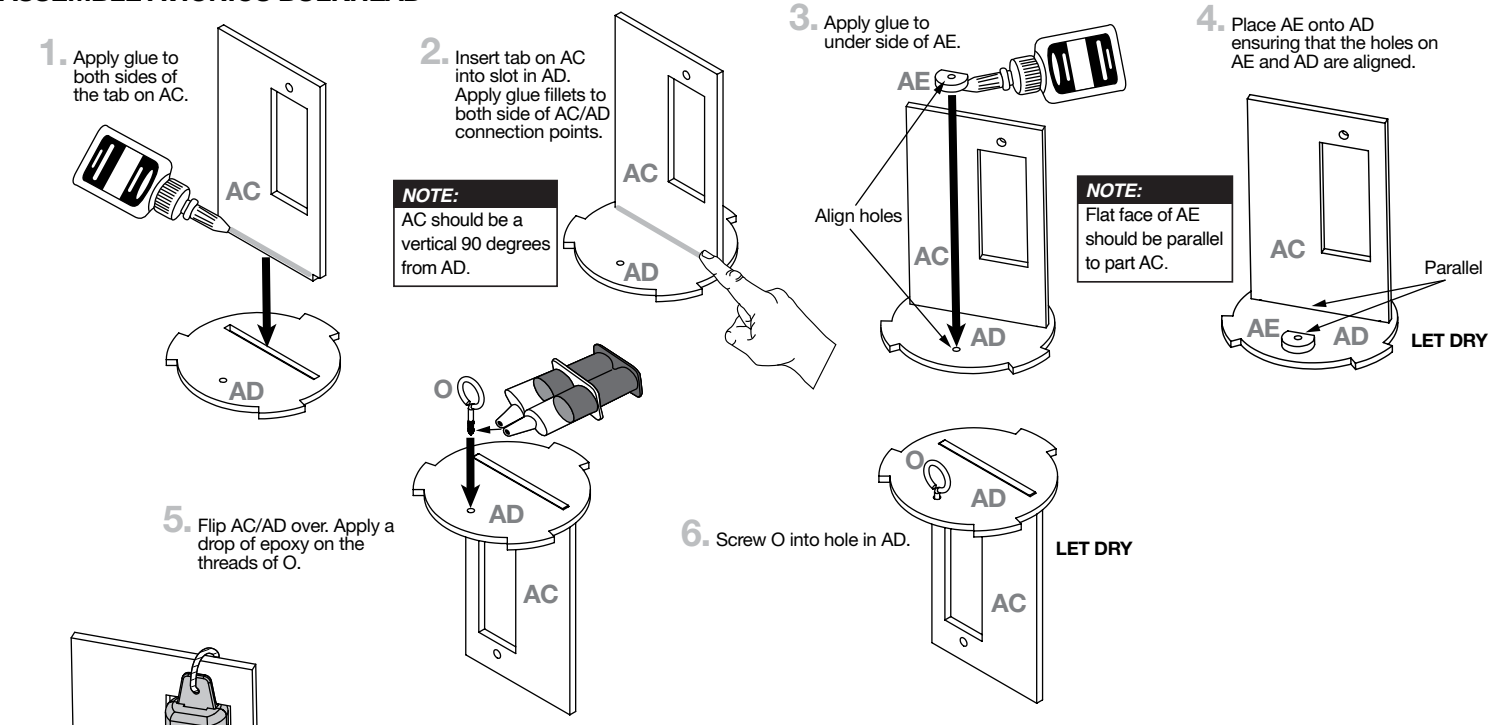

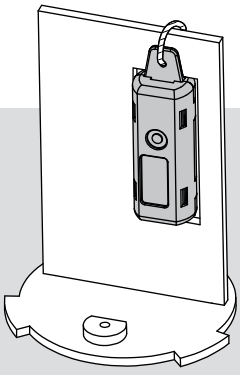

Avionics Bulkhead is designed to be used with 2246 Estes® Altimeter (sold separately).

Secure altimeter to bulkhead by tying aramid cord through the hole in the altimeter and bulkhead.

If using an altimeter of any kind vent holes need to be added to part Z to allow sampling.

GET YOUR ESTES ALTIMETER HERE AT ESTESROCKETS.COM

INSTALL AVIONICS BULKHEAD



1. Insert AC/AD into avionics ring inside E.

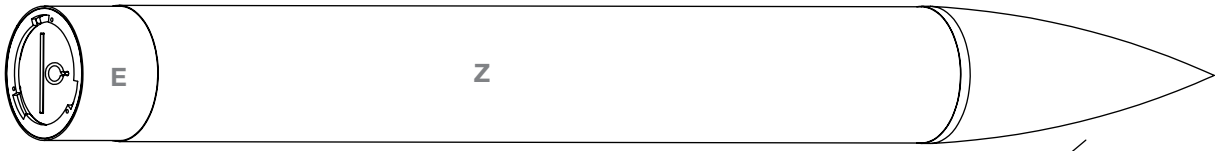

2. Once AC/AD is inserted, turn clockwise to lock in place.

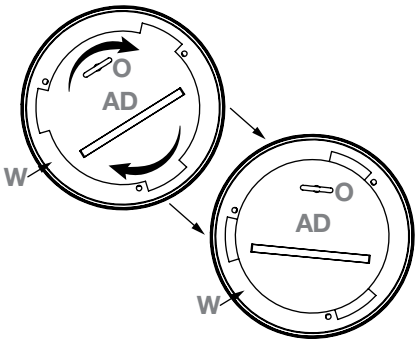

3. Thread AF screws through holes in W and Y.

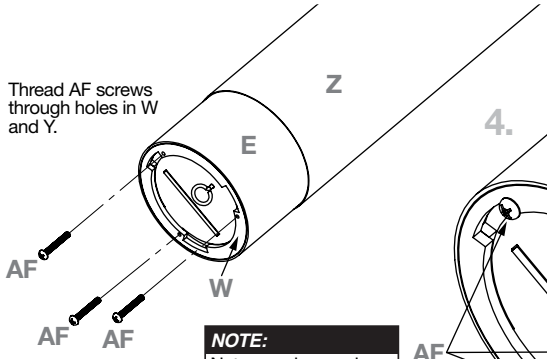

4.

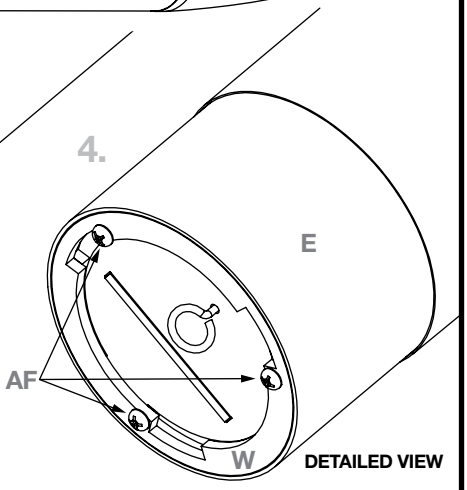

DETAILED VIEW

NOTE:

Not properly securing avionics bulkhead will result in forward half of rocket to fall without the parachute.

PAINT AND APPLY DECALS

1. Spray rocket with white primer, let dry, and sand. Repeat until rocket is smooth.
2. Paint entire rocket black.
3. Mask off rocket as needed for dark blue paint application.
4. Apply decals only after paint is dry.
5. OPTIONAL: Apply protective clear coat.

PAINT COLORS

Dark Blue
Black

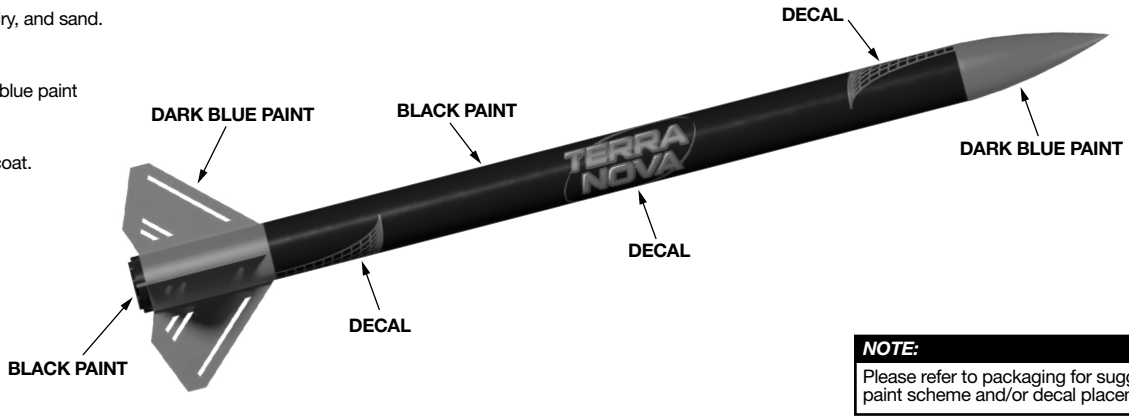

NOTE:

Please refer to packaging for suggested paint scheme and/or decal placement.

INSTALL RECOVERY SYSTEM

1. Pull aramid cord R out of body tube S. Tie a loop at the end of R. Tie one end of shock cord AG onto loop in R.

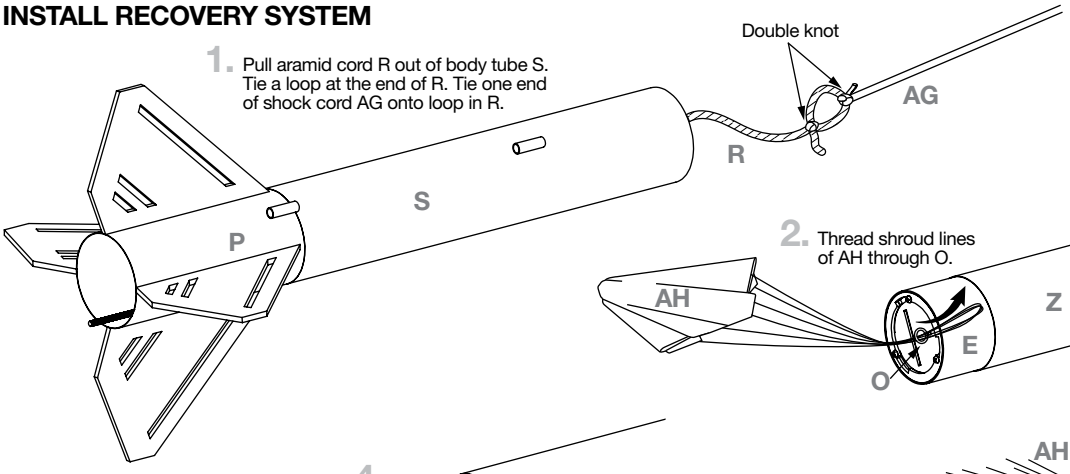

2. Thread shroud lines of AH through O.

3.

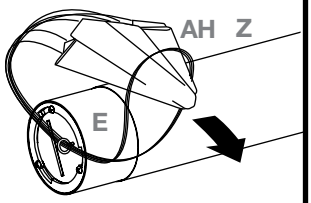

4.

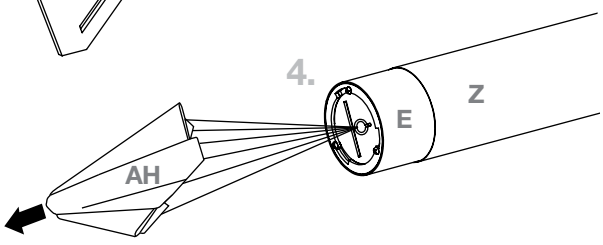

5. Tie AG to O in a double knot.

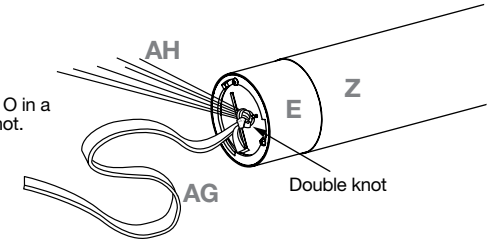

PREPARE RECOVERY SYSTEM

1. Push recovery wadding down towards end of body tube.

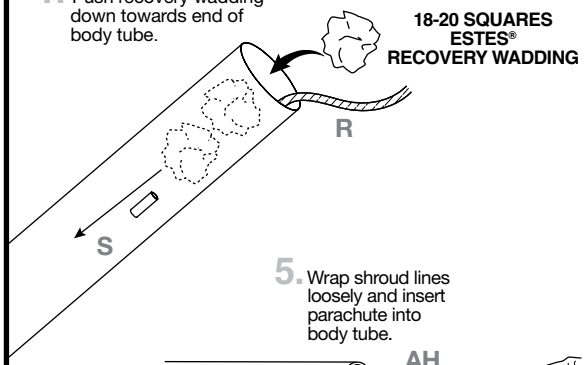

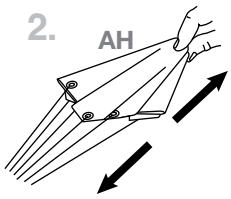

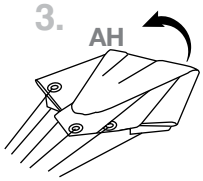

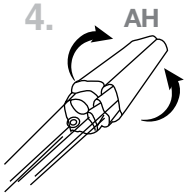

5. Wrap shroud lines loosely and insert parachute into body tube.

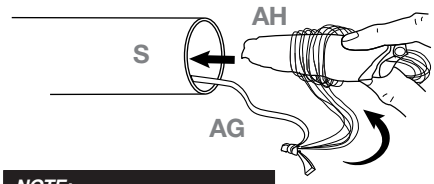

NOTE:
Recovery wadding and parachute must slide easily into body tube. If too tight, redo.

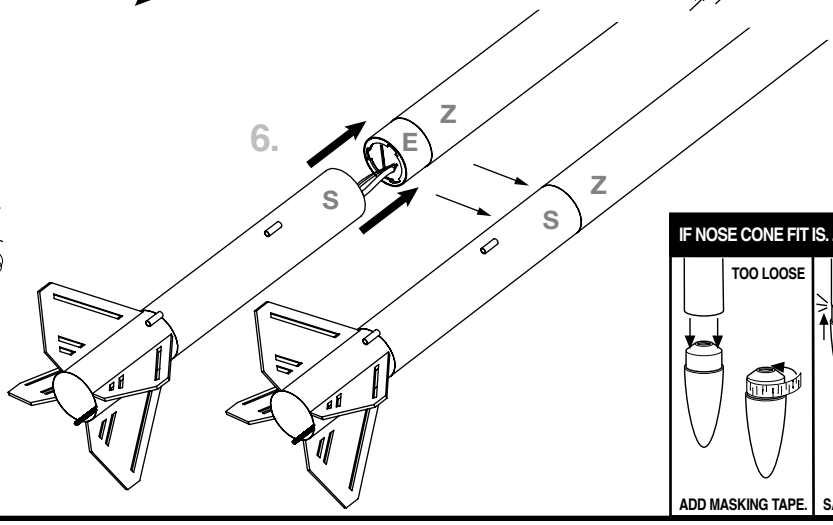

IF NOSE CONE FIT IS…

PREPARE 29 MM ENGINE

1. Wrap 6 to 8 layers of masking tape over end of engine, overlapping the bottom ¼ in.

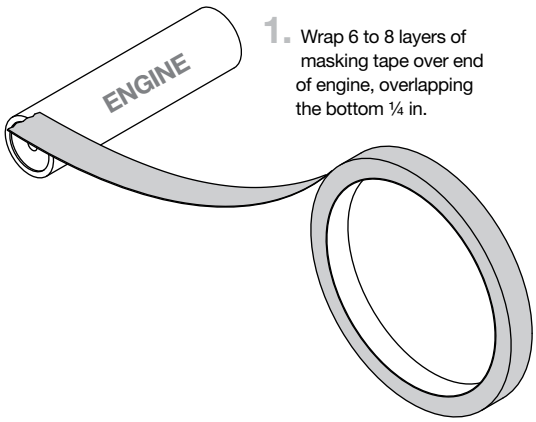

2. Trim off excess tape.

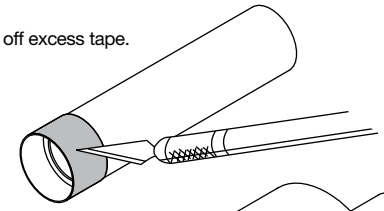

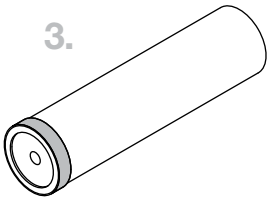

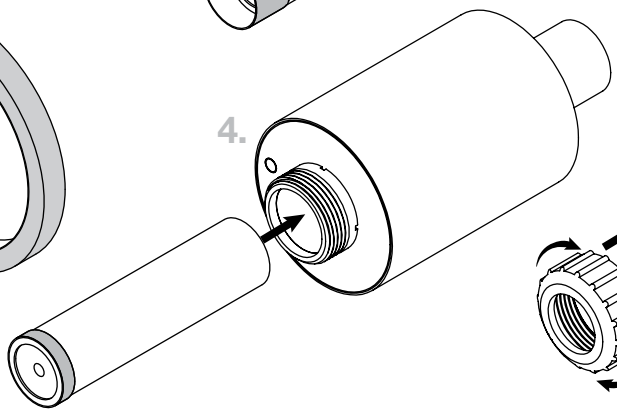

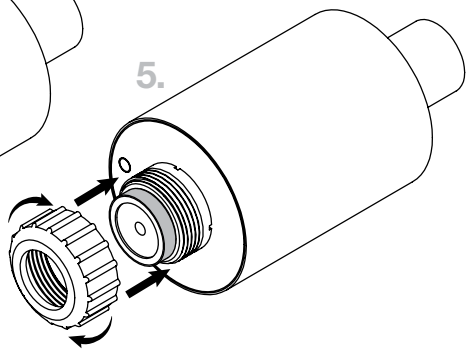

6. Insert part Q into the alignment tube on the engine mount.

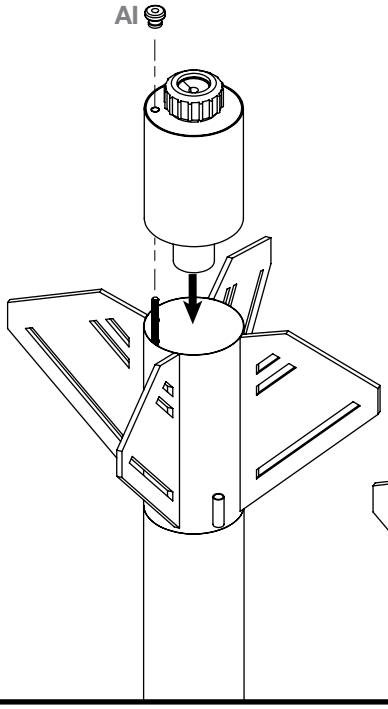

7. Use one each.

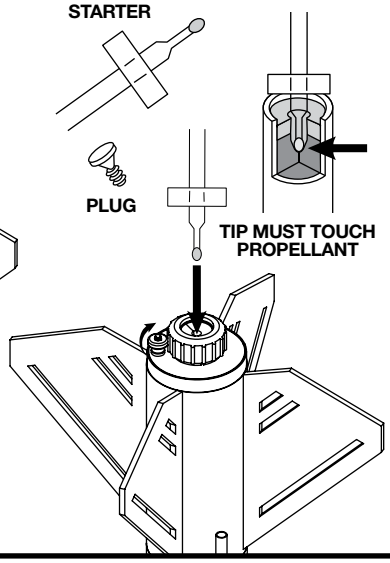

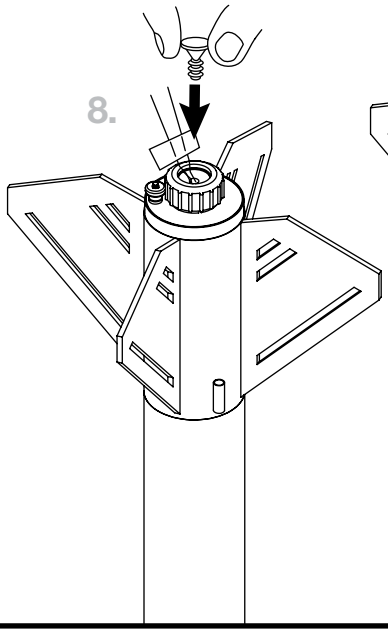

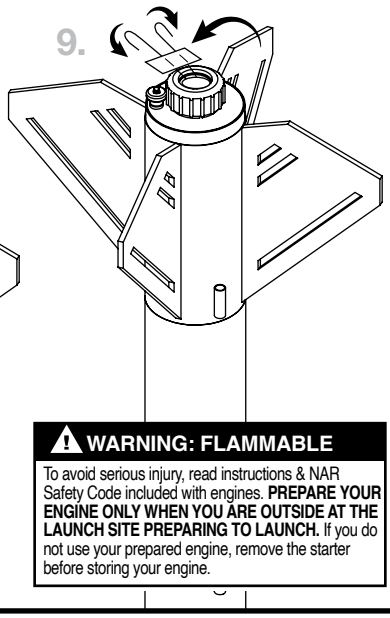

⚠ WARNING: FLAMMABLE

To avoid serious injury, read instructions & NAR Safety Code included with engines. **PREPARE YOUR ENGINE ONLY WHEN YOU ARE OUTSIDE AT THE LAUNCH SITE PREPARING TO LAUNCH.** If you do not use your prepared engine, remove the starter before storing your engine.

PREPARE 24 MM CLUSTER

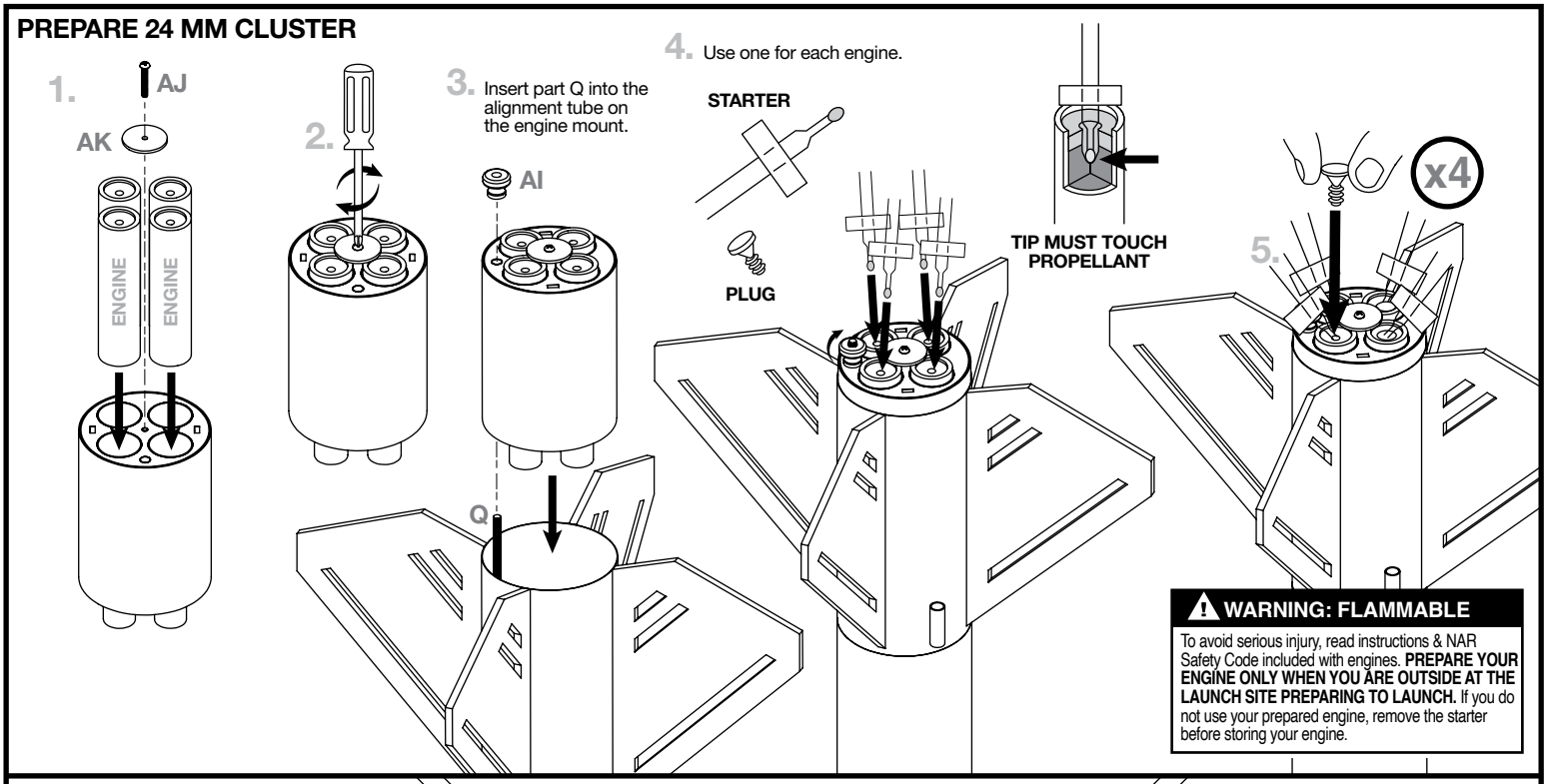

⚠ WARNING: FLAMMABLE

To avoid serious injury, read instructions & NAR Safety Code included with engines. **PREPARE YOUR ENGINE ONLY WHEN YOU ARE OUTSIDE AT THE LAUNCH SITE PREPARING TO LAUNCH.** If you do not use your prepared engine, remove the starter before storing your engine.

4 ENGINE CLUSTER WIRING

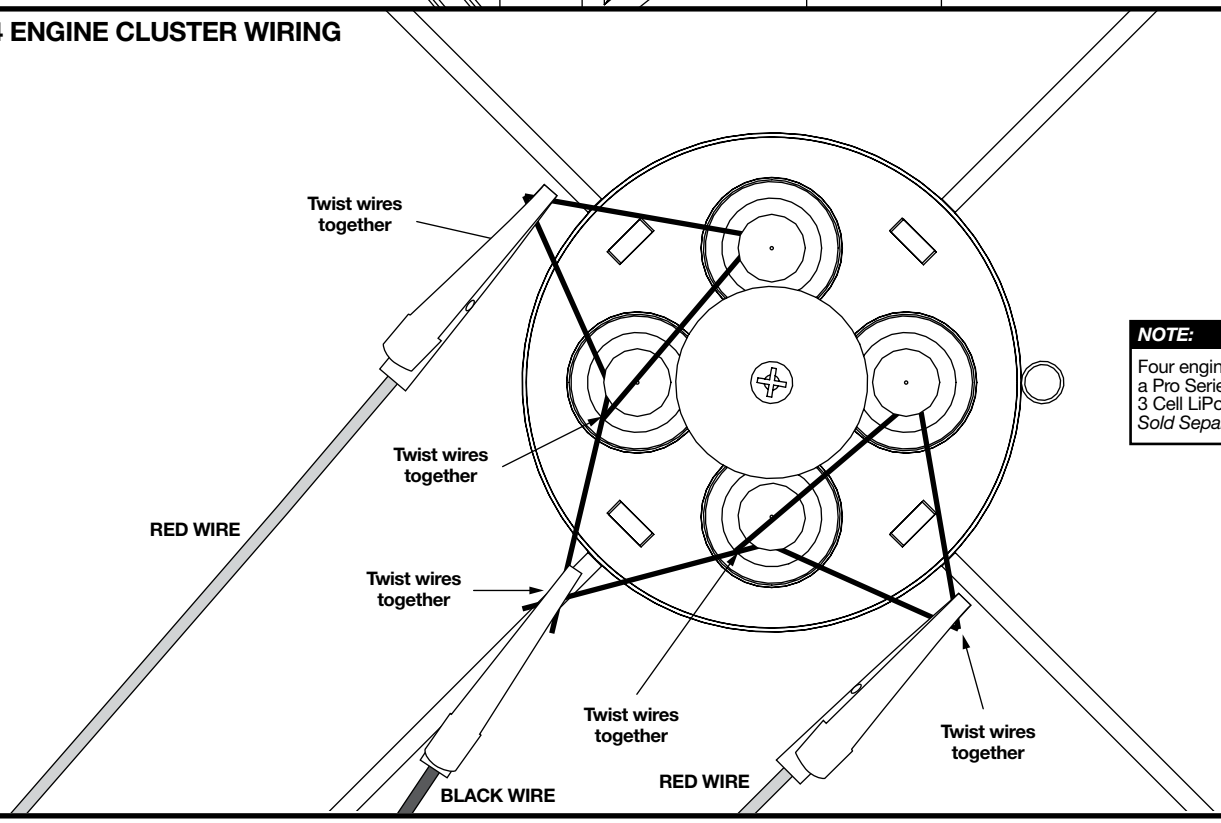

NOTE:

Four engine cluster configuration requires a Pro Series II Launch Controller (2240) & 3 Cell LiPo (11.1 V) Battery (2217). *Sold Separately.*

ENGINE CONFIGURATIONS

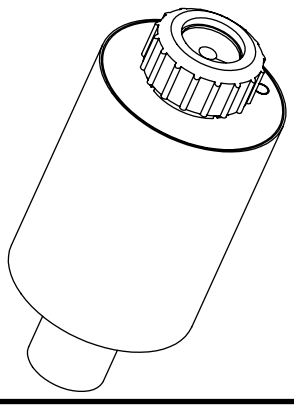

29 MM:
F15-4

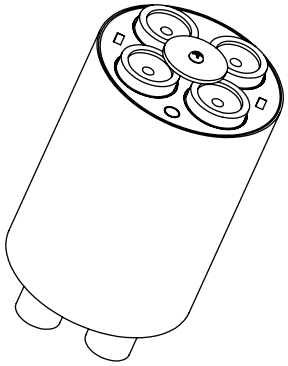

24 MM:
2X D12-5 & 2X D12-7
2X C11-7 & 2X D12-5
2X C11-5 & 2X C11-7

NOTE:

When flying a combination of engines, it is required to insert like engines opposite of one another to achieve symmetric thrust.

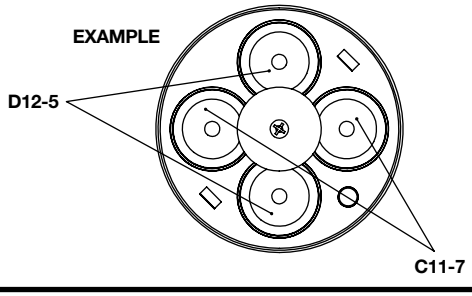

COUNTDOWN AND LAUNCH

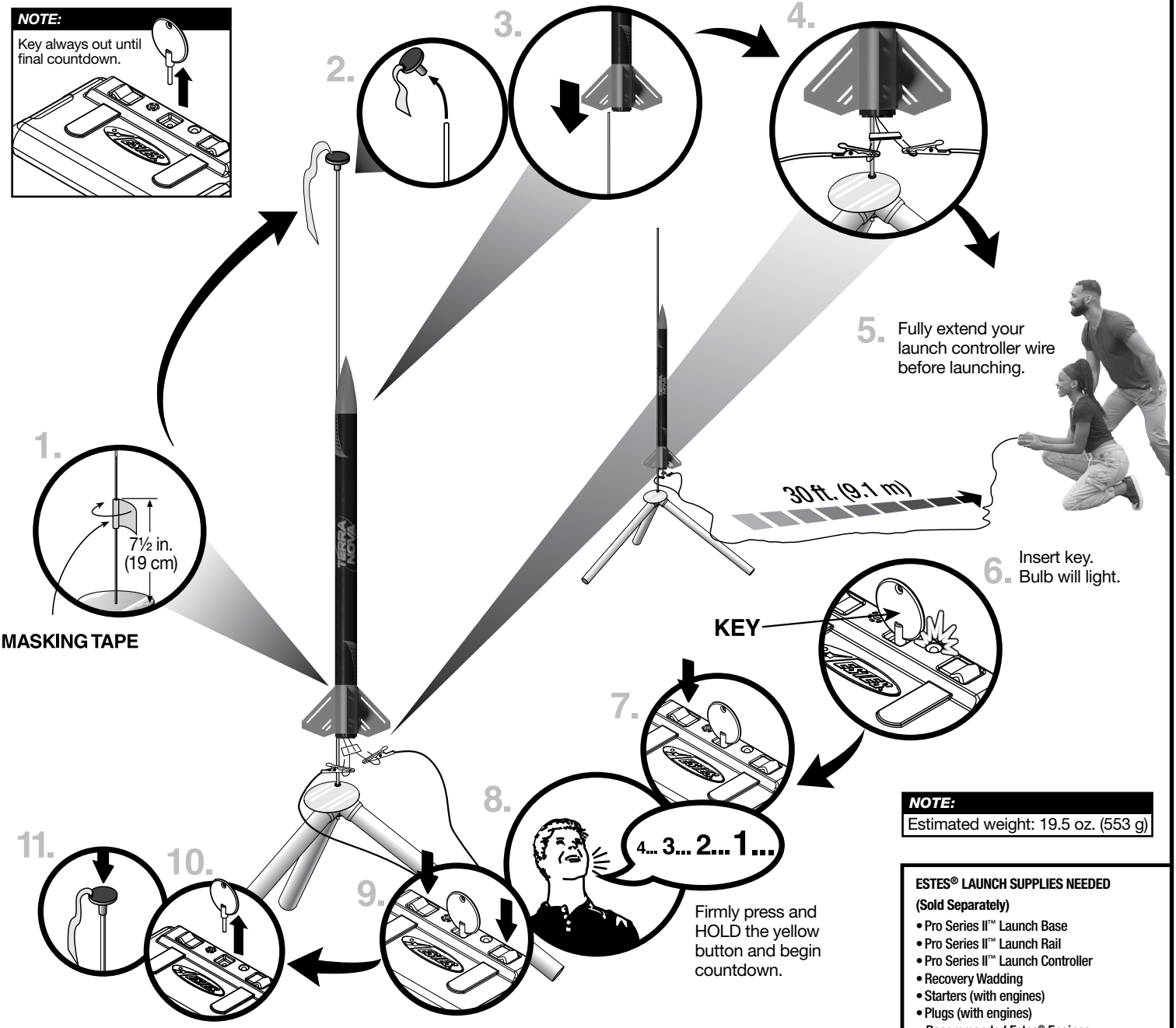

NOTE:
Estimated weight: 19.5 oz. (553 g)

ESTES® LAUNCH SUPPLIES NEEDED
(Sold Separately)

- Pro Series II™ Launch Base
- Pro Series II™ Launch Rail
- Pro Series II™ Launch Controller
- Recovery Wadding
- Starters (with engines)
- Plugs (with engines)
- Recommended Estes® Engines:
  29 mm: F15-4
  24 mm: 2x D12-5 & 2x D12-7
  2x C11-7 & 2x D12-5
  2x C11-5 & 2x C11-7

PRECAUTIONS



PRE-LAUNCH CHECK For safety, never launch a damaged rocket. Check the rocket's body, nose cone and fins. Also, check the engine mount, recovery system and launch lug(s). Repair any damage before launching the rocket.

FLYING YOUR ROCKET Choose a large field (1000 ft. [305 m] square) free of dry weeds and brown grass. The larger the launch area, the better your chance of recovering your rocket. Launch only with little or no wind and good visibility. Always follow the National Association of Rocketry (NAR) SAFETY CODE (enclosed).

MISFIRES TAKE THE KEY OUT OF THE CONTROLLER. WAIT ONE MINUTE BEFORE GOING NEAR THE ROCKET. Disconnect the micro-clips and remove the engine. Take the plug and starter out of the engine. A burned starter means the starter tip was not touching engine propellant. Install a new starter; be sure the tip is touching propellant inside the engine. Push the plug in place. Repeat steps under Countdown and Launch.

© 2026 Estes Industries, LLC • All Rights Reserved
Estes Industries, LLC • 1295 H Street, Penrose, CO 81240-9698 • Made in Guangzhou, Guangdong, China
22 PAP
PN 090004-9739 (7-26)